3000 LB

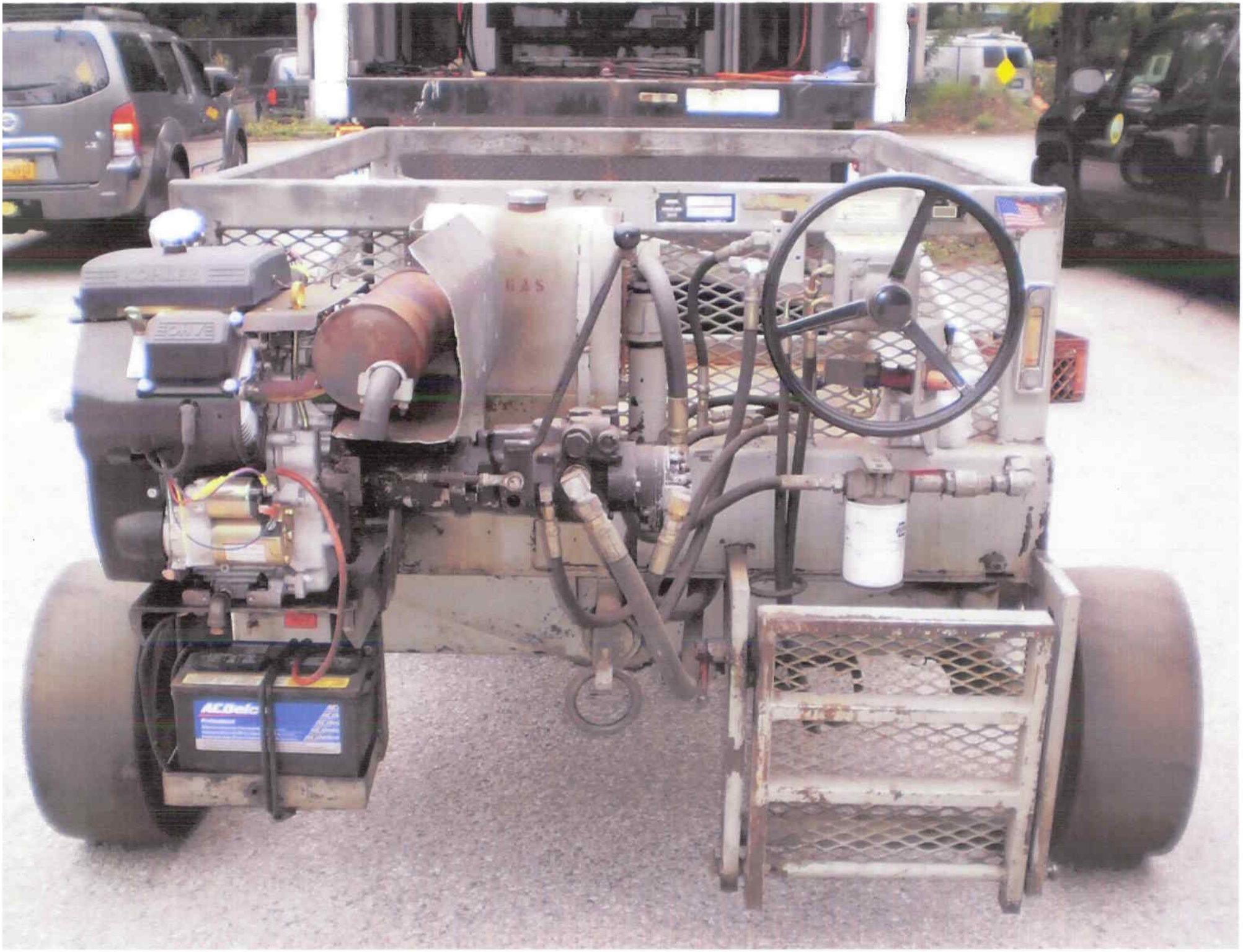
GAS
AC Delco

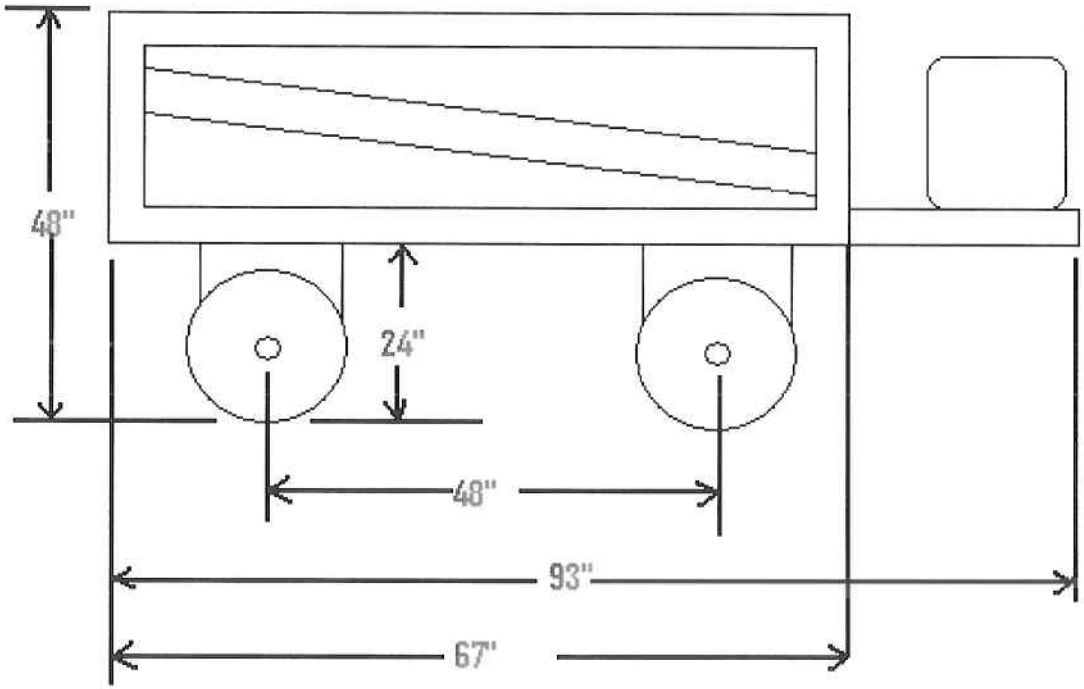
48"
24"
48"
93"
67"

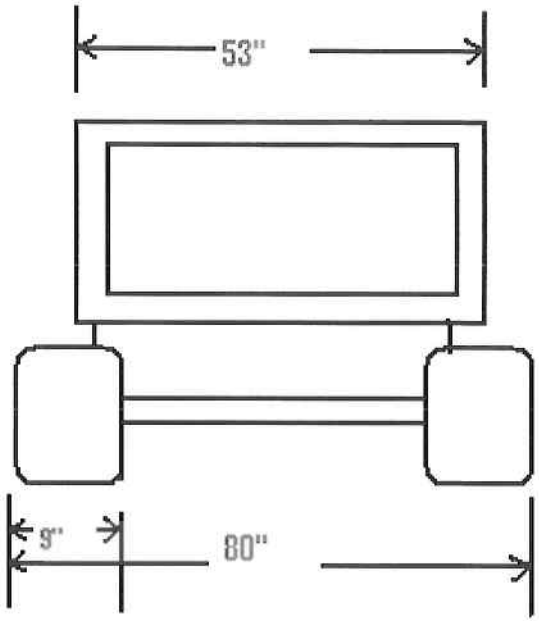
53"
9"
80"

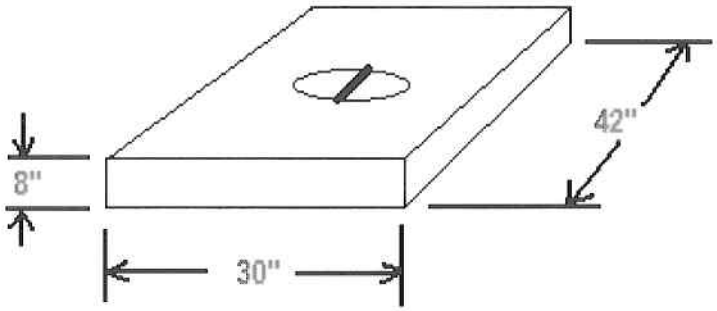
42"
8"
30"